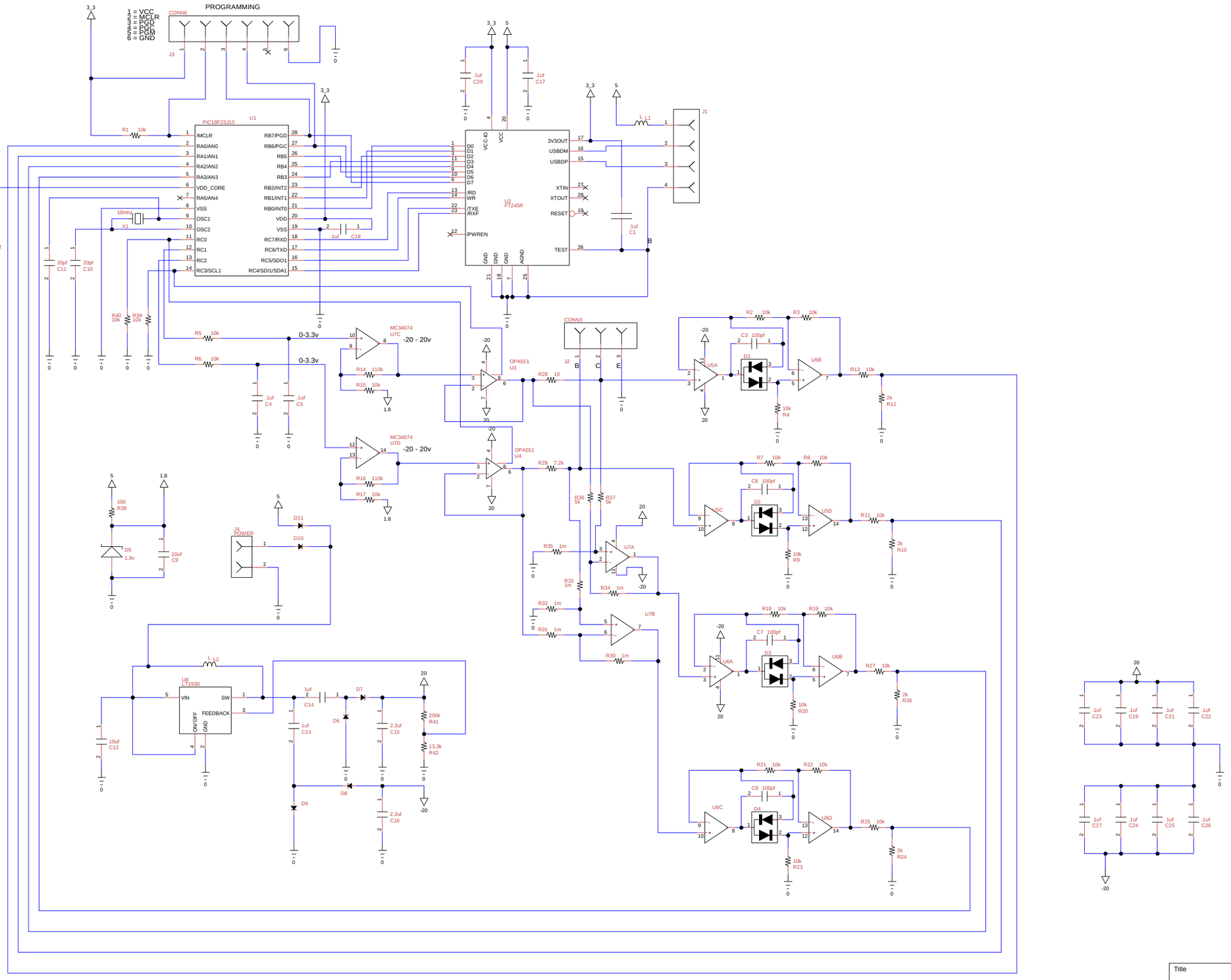

Title	
Author	
File d Settings\Les H\My Documents\curve_tracer.dsn	Document
Revision 1.0	Date / Sheets 1 of 1